Interfacing Numeric Keypad to MB90F387S using 74C922 Keypad Encoder

Numeric Keypad

- Most common input device in embedded systems appliances
- Follows the telephony standard layout (3x4 or 4x4)
- Uses array of pushbutton switches with common columns (X) and rows (Y); eliminates individual control of all switches
- Can be interfaced with encoder integrated circuit

3x4

4x4

Schematic Diagram

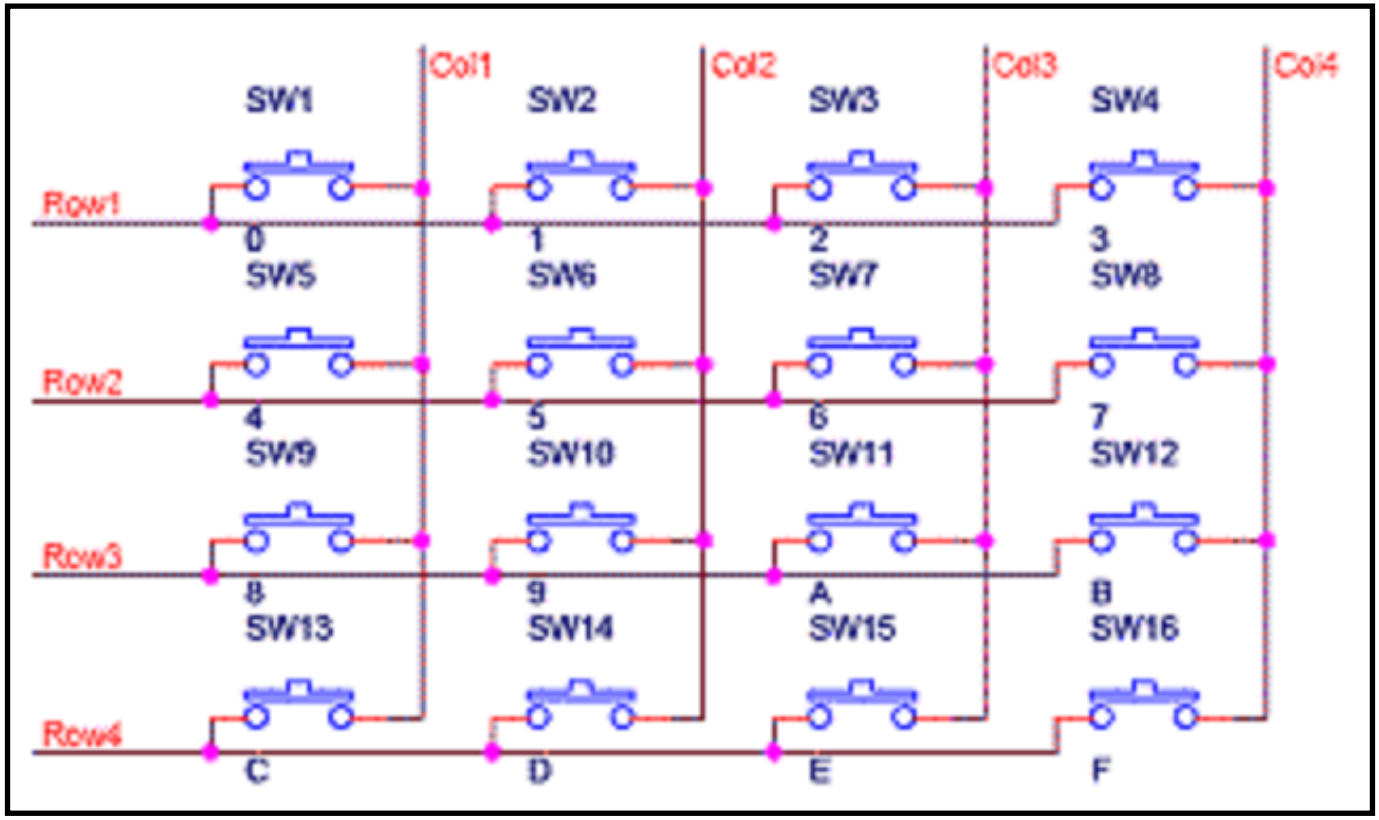

4x4 layout

How to Control?

- Supply one of the columns for example Column 1 (X1) with logic-1 while the rest is logic-0.
- If the one of the buttons in that column is pressed, current will flow to the corresponding row.
- Therefore, the column and row data will now be used to identify the specific key pressed.
- Move to the next column and read the row data.

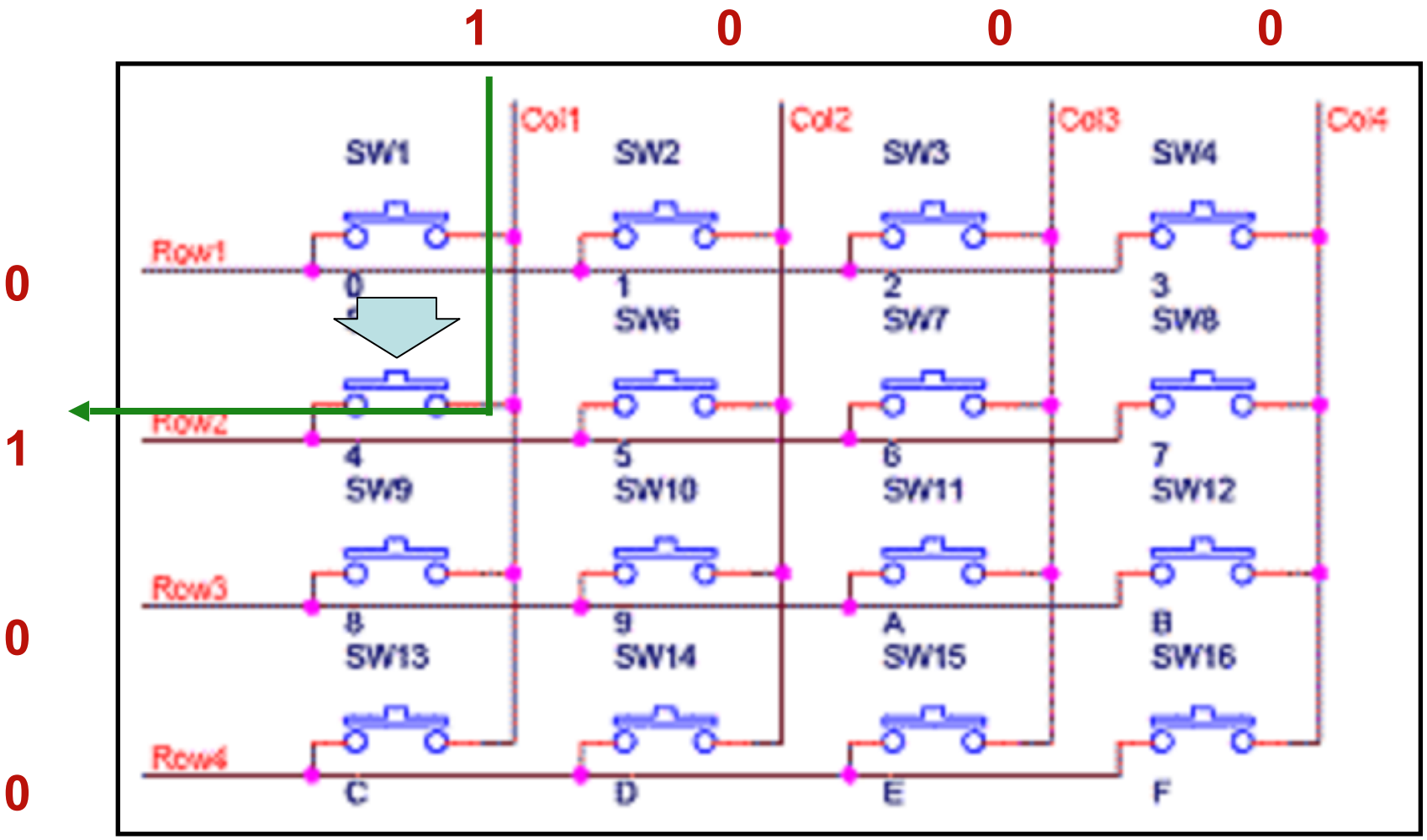
1
0
0
0
0
1
0
0
Col1
Col2
Col3
Col4
Row1
Row2
Row3
Row4
SW1
SW2
SW3
SW4
0
1
2
3
SW6
SW7
SW8
4
5
6
7
SW9
SW10
SW11
SW12
8
9
A
B
SW13
SW14
SW15
SW16
C
D
E
F

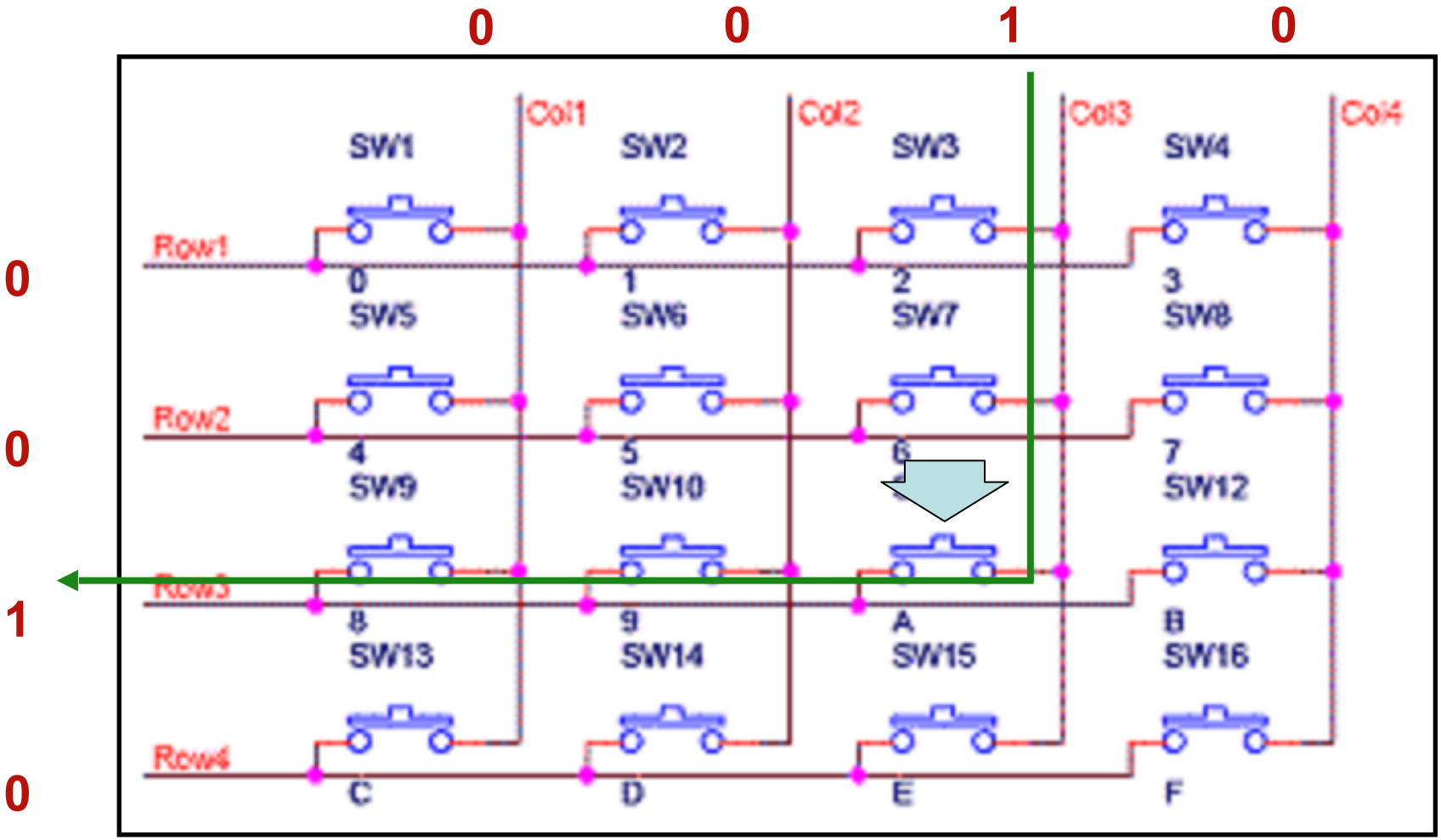
0
0
1
0
Col1
Col2
Col3
Col4
SW1
SW2
SW3
SW4
Row1
0
1
2
3
SW5
SW6
SW7
SW8
0
Row2
4
5
6
7
SW9
SW10
SW12
Row3
1
8
9
A
B
SW13
SW14
SW15
SW16
Row4
0
C
D
E
F

Row and Column Data

Key	SW No.	Column	Row
1	SW1	1000b	1000b
4	SW5		0100b
7	SW9		0010b
*	SW13		0001b
2	SW2	0100b	1000b
5	SW6		0100b
8	SW10		0010b
0	SW14		0001b
3	SW3	0010b	1000b
6	SW7		0100b
9	SW11		0010b
#	SW15		0001b
A	SW4	0001b	1000b
B	SW8		0100b
C	SW12		0010b
D	SW16		0001b

Control Using 74C922

- 74C922 is a CMOS key encoder that encode an array of SPST (**s**ingle-**p**ole, **s**ingle-**t**hrow) switches
- Keyboard (keypad) scanning is implemented automatically by the IC
- It has an internal debounce circuitry
- Data Available (DAVBL) output returns a logic-1 when any of the key is pressed

You can download the data sheet here.

Connection Diagrams

Pin Assignment for DIP

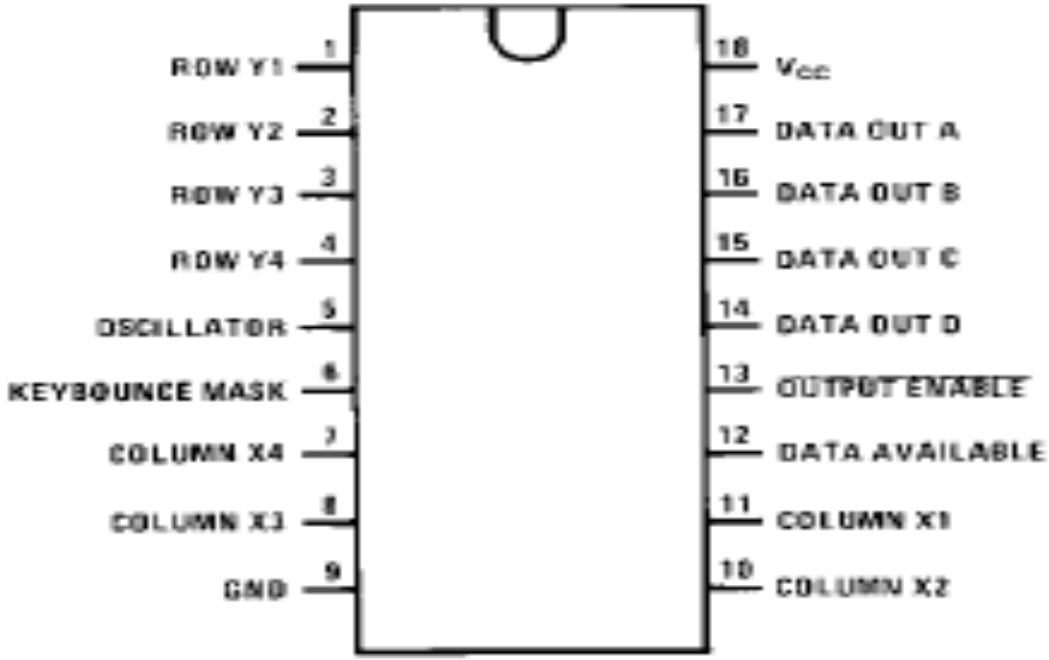

Top View
MM74C922

Key	74C922 Data Output (bin)	Hex
1	0000b	0x00
2	0001b	0x01
3	0010b	0x02
A	0011b	0x03
4	0100b	0x04
5	0101b	0x05
6	0110b	0x06
B	0111b	0x07
7	1000b	0x08
8	1001b	0x09
9	1010b	0x0A
C	1011b	0x0B
*	1100b	0x0C
0	1101b	0x0D
#	1110b	0x0E
D	1111b	0x0F

Keys in yellow cannot be accessed in 3x4 layout.

Interfacing Numeric Keypad to PIC16F877A

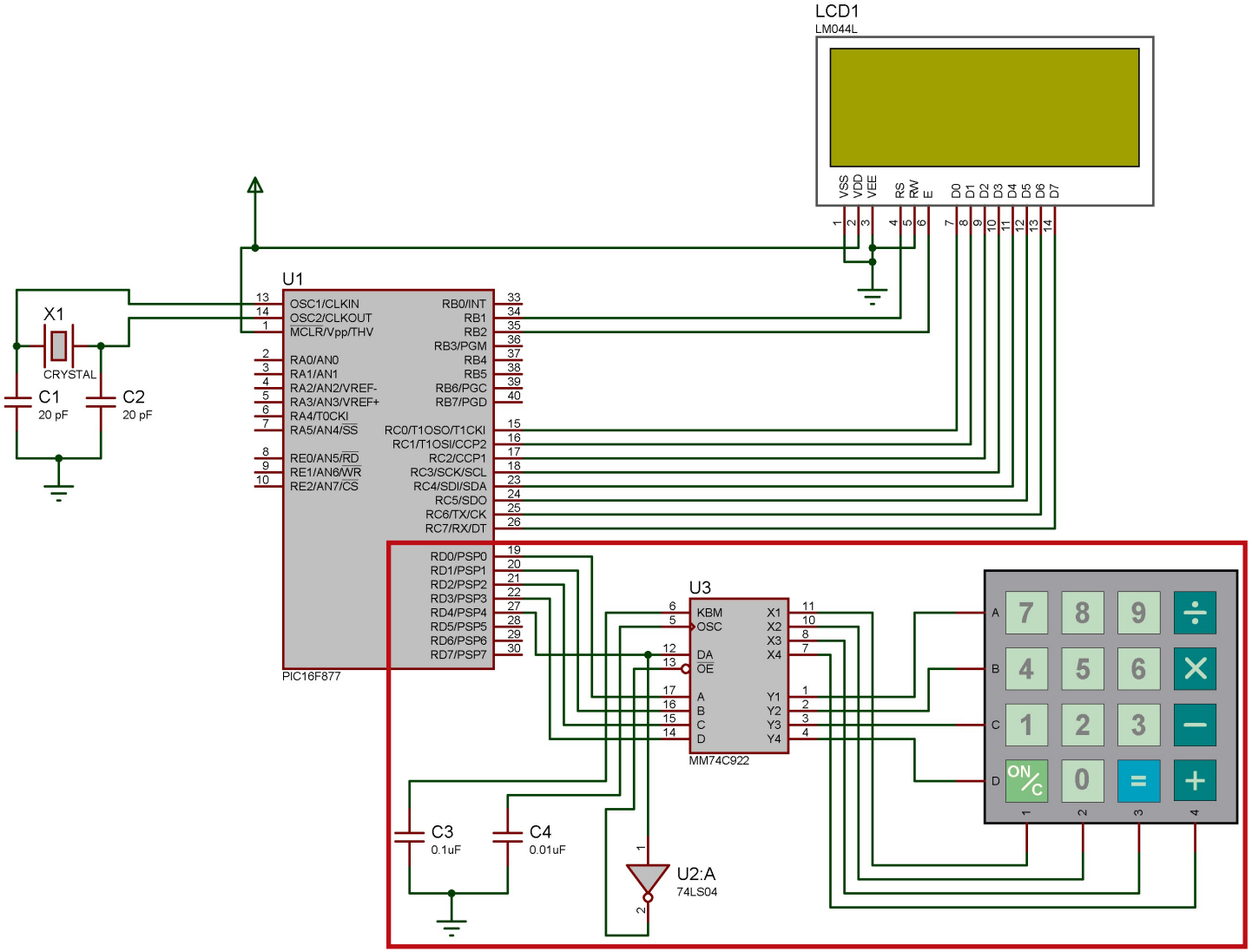

* keypad in this example has 4x4 switch configuration

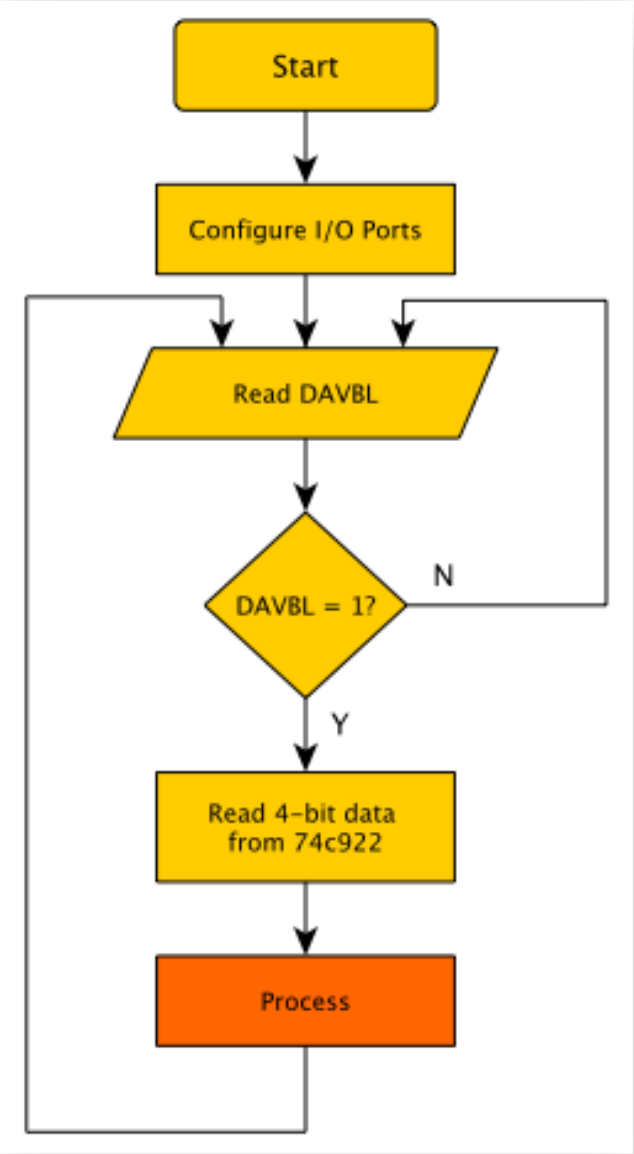

Read **DAVBL** before reading
4-bit data from 74C922

Software Control

- The example before shows that the keypad data will only be available if DAVBL is high. The software will continue to read DAVBL and exit the read loop only when DAVBL be equal to high.
- Not very efficient but it works.
- Most efficient method:
  - external interrupt
  - scheduling

University of San Carlos | Department of
COMPUTER ENGINEERING

CpE 3201
Embedded Systems

End of Lecture

References:

- PIC16F87X Data Sheet, Microchip Technology Inc. 2003.
- MM74C922 Data Sheet, Fairchild Semiconductor 1999.